Revisions			
Rev#	Revision Description	MM/DD/YY	Approved By:

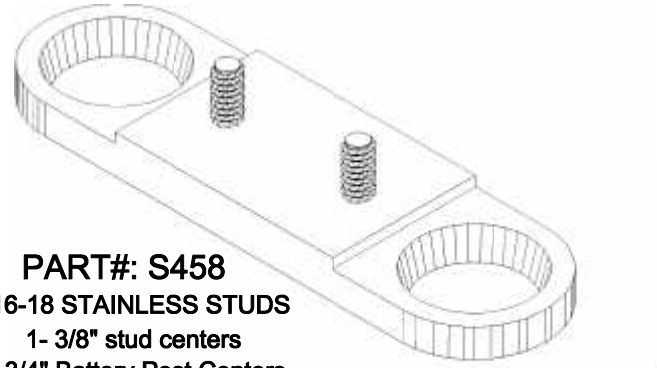

PART#: S458

5/16-18 STAINLESS STUDS

1- 3/8" stud centers

3-3/4" Battery Post Centers

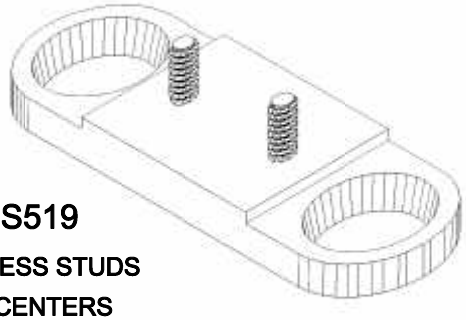

PART#: S519

5/16-18 STAINLESS STUDS

1.00" STUD CENTERS

3.00" Battery Post Centers

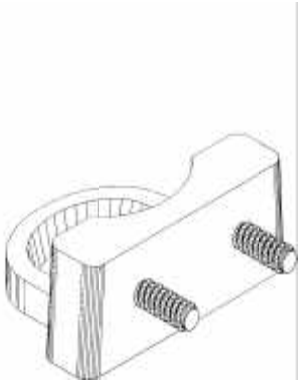

PART #: S472

5/16-18 STAINLESS STUDS

1.00" STUD CENTERS

Item#	Part Number			
	S458-S472-S519			

Approved By:		MM/DD/YY
Drawn By:	jtl	
Checked By:		
Revision 1:		
Revision 2:		
Revision 3:		

Material Type:
6% ANTIMONIAL LEAD

Finish Type or Method:
DEBUR ALL

Avoid scaling CAD data without supervisory approval

Motive Power Battery

LEAD CASTINGS

S458 - S472 - S519

Drwg Number: 090308-19

Revision

Scale: XX : XX

Sheet XX of XX